SUBMITTAL DATA SHEET

MSKIT-HP454-12 1 TON HP MINI SPLIT KIT W/ 12K BTU INDOOR/OUTDOOR UNITS

High Wall Heat Pump System	
Location:	Approval:
Engineer:	Date:
Submitted to:	Construction:
Submitted by:	Unit #:
Reference:	Drawing #:



INDOOR SPECIFICATIONS		
Indoor Air Flow (Turbo/H/M/L/Si) (CFM)		341.4 / 309.0 / 206.0 / 176.6 / 94.2
Indoor Noise Level (Turbo/H/M/L/Si) (dBA)		45.0/40.5/32.5/25.0/17.5
Dimension(W×D×H)	**inch**	31-9/16 x 7-7/16 x 11-11/16
	mm	802 × 189 ×297
Package(W×D×H)	**inch**	34-7/16 x 11-1/4 x 14-15/16
	mm	875 × 285 × 380
Net/Gross Weight	**lbs**	19.40/25.13
	kg	8.8/11.4

OUTDOOR SPECIFICATIONS		
Compressor Type		ROTARY
Compressor Model		KSN98D64UFZ3
Refrigerant		R454B
Refrigerant Oil Charge(mL)		300
Refrigerant Oil		VG74
Outdoor Air Flow (Max) (CFM)		1235.294118
Outdoor Noise Level (dBA)		54.0
Dimension(W×D×H)	**inch**	30-1/8 x 11-15/16 x 21-7/8
	mm	765 × 303 × 555
Package(W×D×H)	**inch**	34-15/16 x 13-1/4 x 24
	mm	887 × 337 × 610
Net/Gross Weight	**lbs**	61.29/67.02
	kg	27.8/30.4

EFFICIENCY			
Cooling		**Heating**	
SEER2	21.2	**HSPF2-4**	8.7
EER2	10.1	**COP**	3.30

ELECTRICAL	
Power Supply	115V,60Hz,1Ph
System MCA	19.0
Connection Wiring	14#x4
System MOCP	20
Compressor RLA	14.0
Outdoor Fan Motor RLA	0.6
Outdoor Fan Motor W	34
Indoor Fan Motor RLA	0.6
Indoor Fan Motor W	20
System Power Input @ Cooling (W)	1188(140 ~ 1200)
System Power Input @ Heating (W)	1065(200 ~1230)
MCA: Min. circuit amps (A)	MOCP: Max. over current protection (A)
RLA: Rated load amps (A)	W: Fan motor rated output (W)

PERFORMANCE of Cooling	
Cooling (Btu/hr)	
Rated Capacity	12000
Min/Max Capacity	2200~12300
Moisture Removal(L/h)	1.4
Standard Operating Range(℉/℃)	5~122(-15～50)
Conditions:	Indoor: 80°F DB/67°F WB Outdoor: 95°F DB/75°F WB

PERFORMANCE of Heating	
Heating (Btu/hr)	
1. @ 47°F Rated	12000
1. @ 47°F Min/Max Capacity	3400~12200
2. @ 17°F Rated	7300
3. @ 5°F Rated: Capacity / COP	6600/1.85
3. @ 5°F Max: Capacity	6600
Standard Operating Range(℉/℃)	5~75(-15～24)
1. Conditions:	Indoor: 70°F DB/60°F WB Outdoor: 47°F DB/43°F WB
2. Conditions:	Indoor: 70°F DB/60°F WB Outdoor: 17°F DB/15°F WB
3. Conditions	Indoor: 70°F DB/60°F WB Outdoor: 5°F DB/5°F WB

PIPING	
Throttle type(Indoor)	N/A
Throttle type(Outdoor)	Capillary
Liquid Size	6.35mm(1/4in)
Gas Size	9.52mm(3/8in)
Max. Piping Length(ft/m)	82.00(25)
Max. Height Difference(ft/m)	49.20(15)
Max. Pre-charged Length(ft/m)	24.6(7.5)
Refrigerant Pre-charged Amount(oz/g)	24.34(0.69)
Additional Charge of Refrigerant((oz/ft)/(g/m))	0.16(15)
Connection Method	Flared

Indoor Unit Dimension

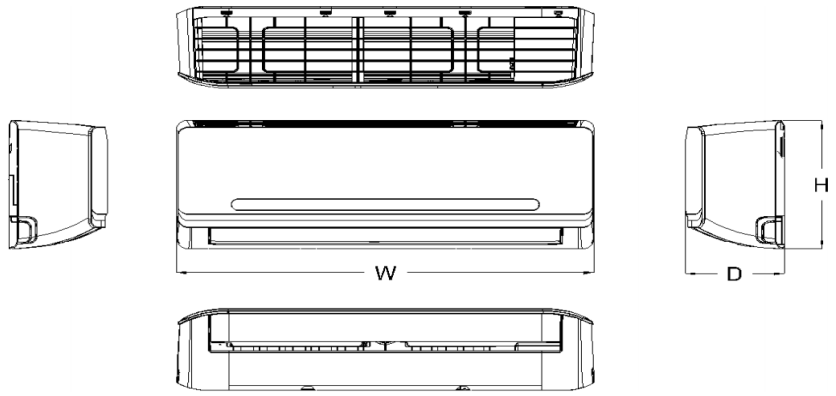

Capacity	Body Code	W (inch/mm)	D (inch/mm)	H (inch/mm)
9K Entry Tier Series	A	28-1/2in / 722mm	7-3/8in / 187mm	11-3/8in / 290mm
9K ~12K	B	31-1/2in / 802mm	7-1/2in / 189mm	11-3/4in / 297mm
18K Entry Tier Series	D	38in / 965mm	8-1/2in / 215mm	12-1/2in / 319mm
18K~24K	E	42-1/2in / 1080mm	8-7/8in / 226mm	13-1/4in / 335mm

Installation Instruction

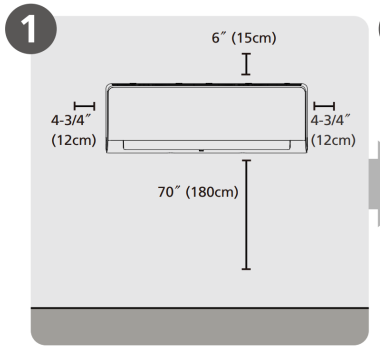

Select Installation Location

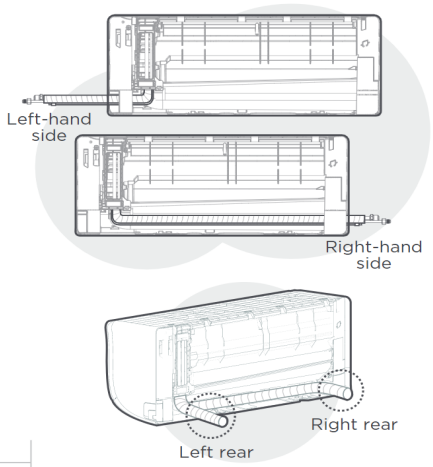

NOTE:
Based on the position of the wall hole relative to the mounting plate, choose the side from which the piping will exit the unit. You have four options for the exit direction of the piping.

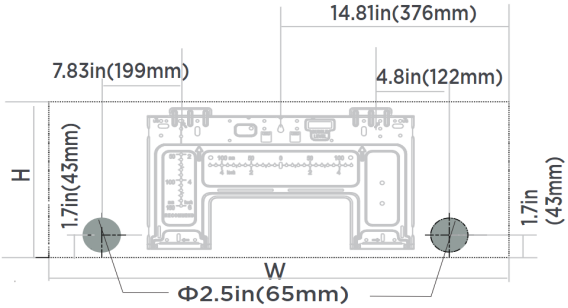

Indoor unit dimensions(WxH):
31.54in(802mm)x11.69in(297mm)

NOTE:
When the gas side connective pipe is Φ (5/8in)16mm or more, the wall hole should be (3-1/2in)90mm.

Outdoor Unit Dimension

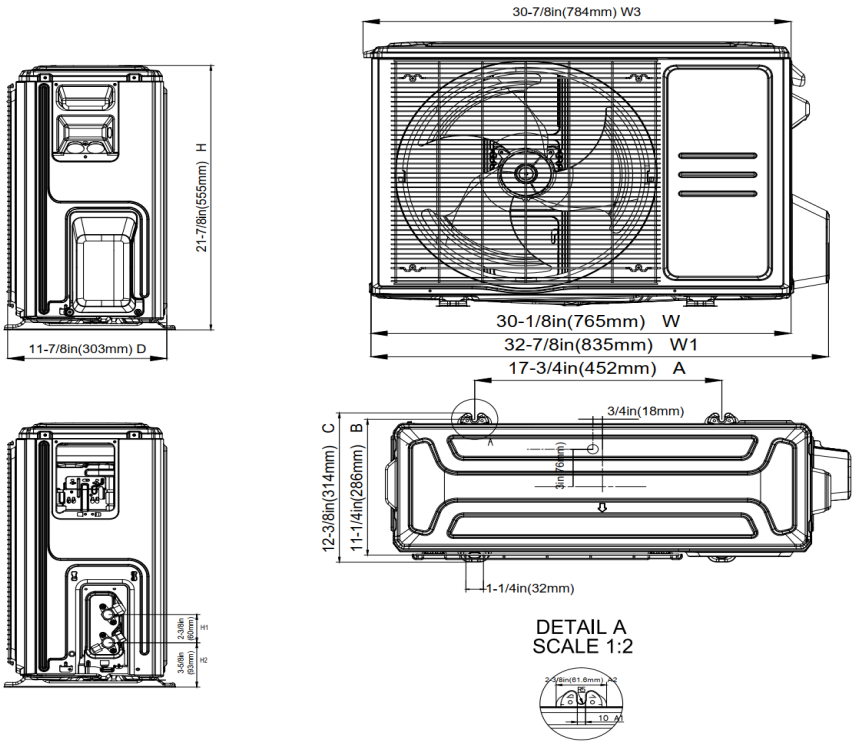

Installation Instruction

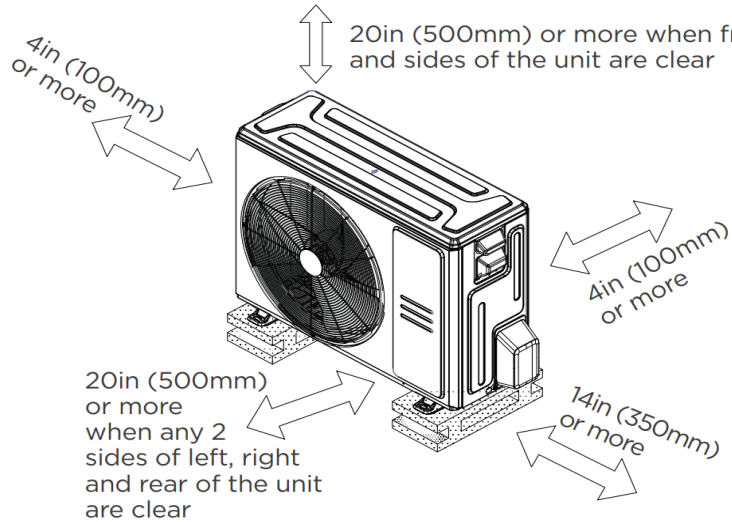

☑ Meets all spatial requirements shown in Installation Clearance Requirements above.

FEATURES

- Indoor unit TU1 copper coil
- Humidity control
- 1~100% fan speed setting
- WiFi capability: through WiFi dongle or wired controller with built-in WiFi
- OTA(by using WiFi dongle)
- Multiple control options available:
  - Two way communication wired controller:120N(X6)
  - Two way communication wired controller with built-in WiFi:120N(X6W)
  - Infrared wired controller: 120L
  - Wireless remote controller
  - Third-Party 24V Thermostat*

*24V interface is required.